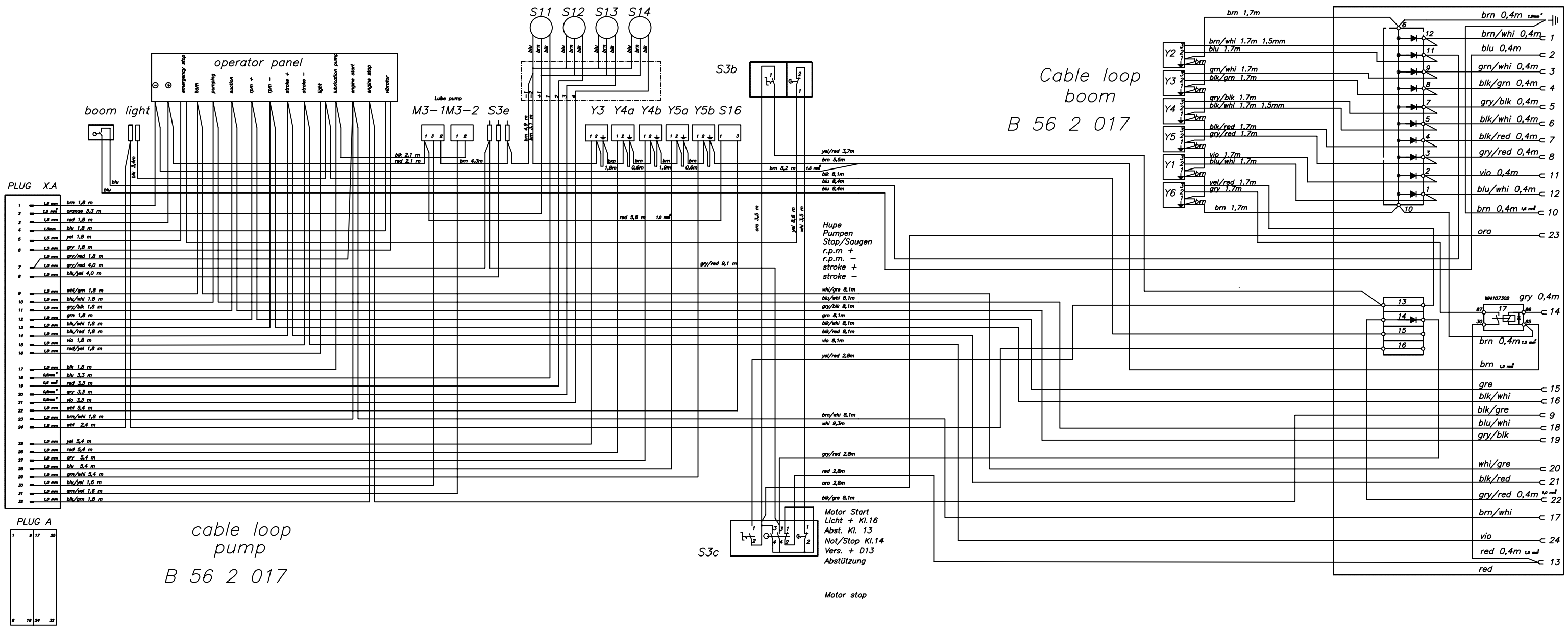
operator panel
emergency stop
horn
pumping
suction
rpm +
rpm −
stroke +
stroke −
light
lubrication pump
engine start
engine stop
vibrator
boom light
Lube pump
M3−1M3−2 S3e
S11 S12 S13 S14
Y3 Y4a Y4b Y5a Y5b S16
S3b
Cable loop
boom
B 56 2 017
PLUG X.A
PLUG A
Hupe
Pumpen
Stop/Saugen
r.p.m +
r.p.m. −
stroke +
stroke −
Motor Start
Licht + Kl.16
Abst. Kl. 13
Not/Stop Kl.14
Vers. + D13
Abstützung
S3c
Motor stop
cable loop
pump
B 56 2 017
PLUG D