NOTES: USED WITH W-106154 DRIVE CYLINDER.

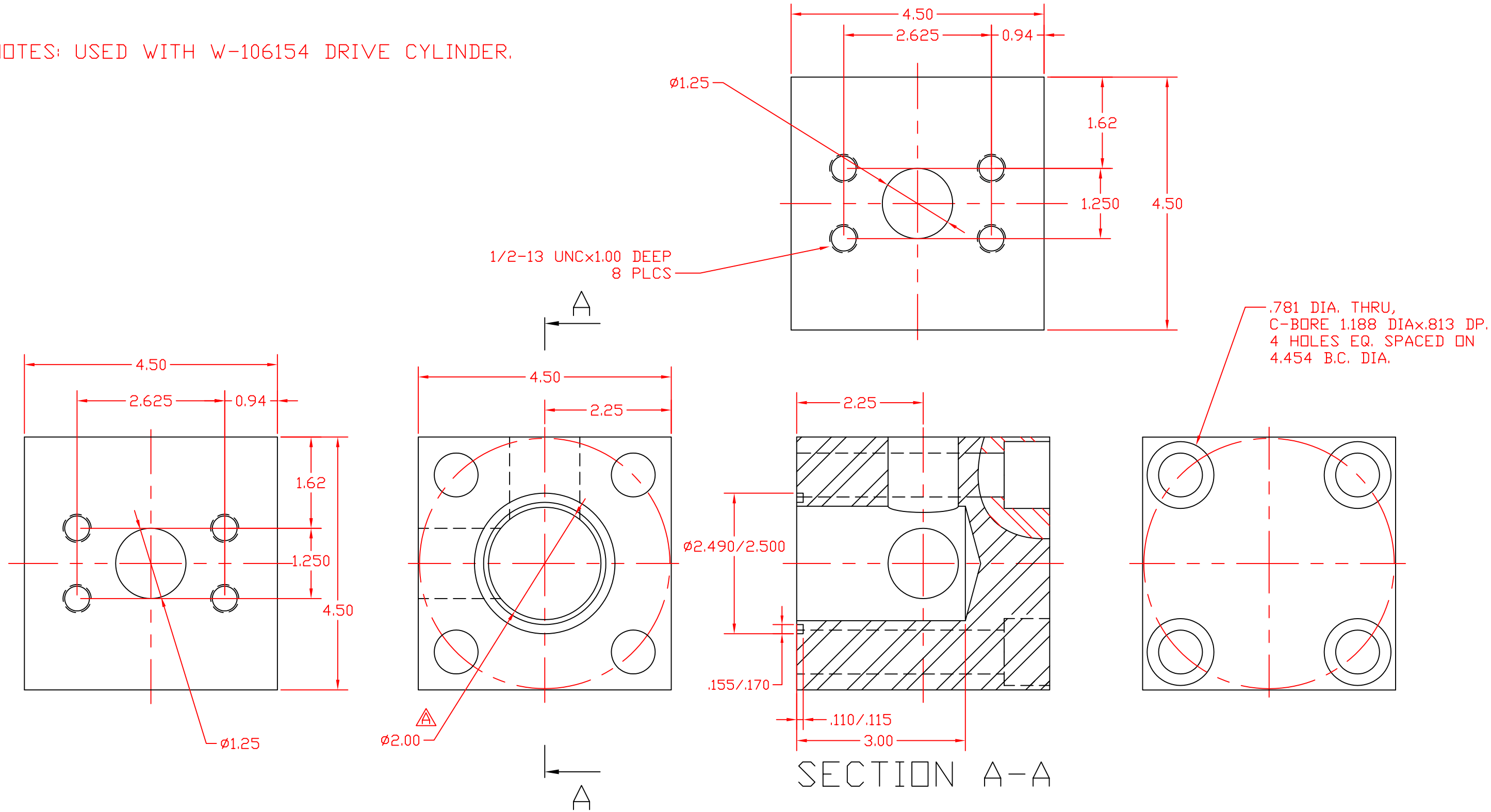

REV	DATE	DESCRIPTION OF CHANGE	BY
A	7/11/01	ECN # 350	SK
—	5/29/01	ECN #318	SK

REVISIONS

DO NOT SCALE DRAWING

UNLESS OTHERWISE SPECIFIED, DIMENSIONS ARE IN INCHES.

TOLERANCES:
.XX .030
.XXX .010
FRACTION 1/32
ANGLE 1/2°

DRAWN	SK	5/03/01
APPVD		

REED

CONCRETE PLACING EQUIPMENT
CHINO, CA 91710

TITLE MANIFOLD, CYLINDER, ROD END

MATERIAL #68286 SQUARE BAR, 4 1/2" CDS

PART NUMBER 802416

REV A

SHEET 1 OF 1

THIS DRAWING IS THE PROPERTY OF REED MANUFACTURING AND IS LOANED WITHOUT CONSIDERATION OTHER THAN THE BORROWER'S AGREEMENT THAT IT SHALL NOT BE REPRODUCED, COPIED, LOANED, OR DISPOSED OF, DIRECTLY OR INDIRECTLY, NOR USED FOR ANY PURPOSE OTHER THAN THAT FOR WHICH IT IS SPECIFICALLY FURNISHED.