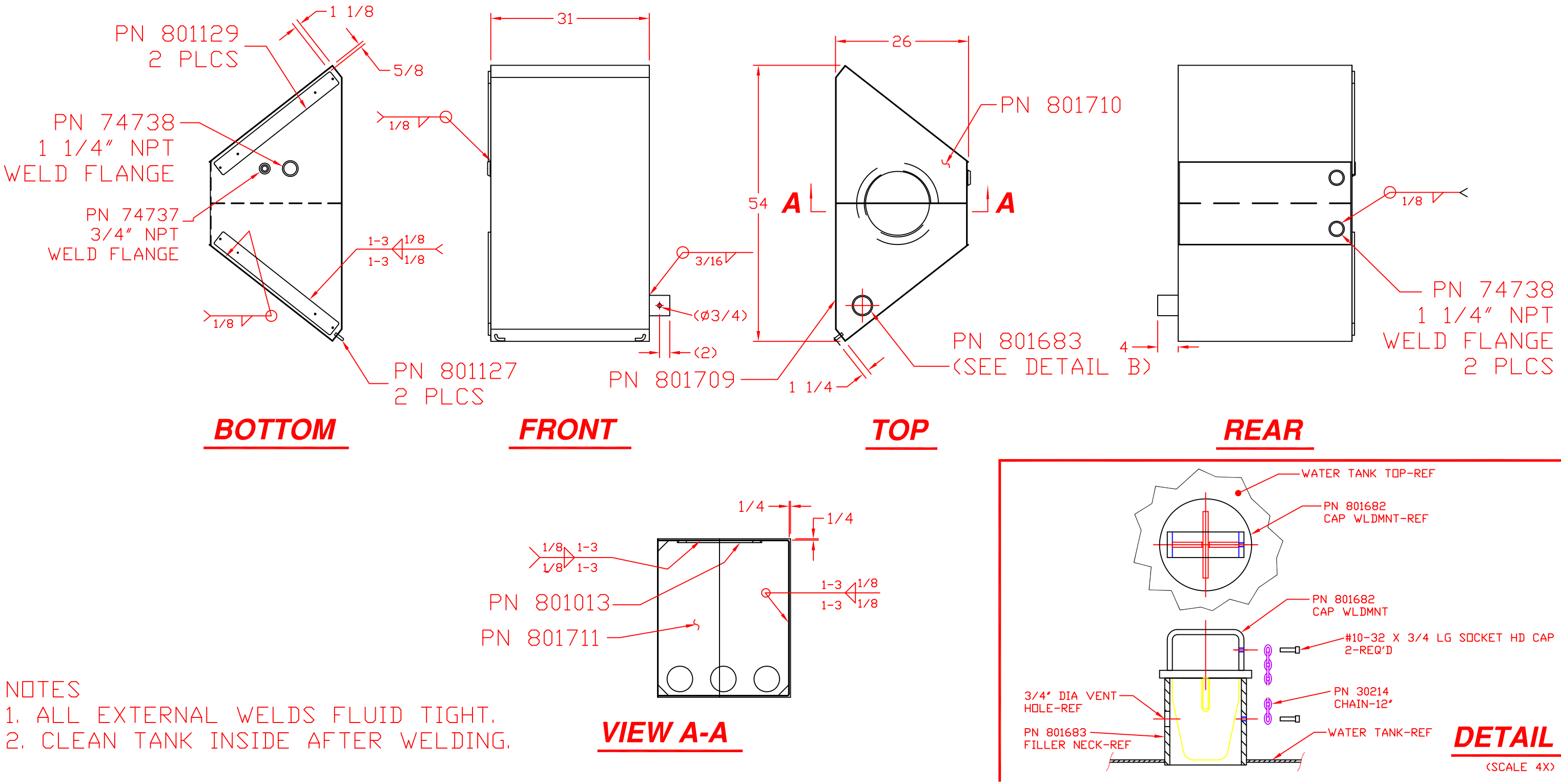

NOTES
1. ALL EXTERNAL WELDS FLUID TIGHT.
2. CLEAN TANK INSIDE AFTER WELDING.

LTR	DATE	ENGINEERING CHANGE NOTICE #	BY

REVISIONS

UNLESS OTHERWISE SPECIFIED, DIMENSIONS ARE IN INCHES AND TOLERANCES ARE:

FRACT	DECIMAL	ANGLE
1/32	.030	1/2°

DO NOT SCALE DRAWING

CE	BY	DATE
DRAWN	SK	3/29/00
APPVD		

REED

CONCRETE PLACING EQUIPMENT
CHINO, CA 91710

TITLE
WATER TANK WELDMENT, XT36

MATERIAL

PART NUMBER 801708

REV

SHEET 1 OF 1

THIS DRAWING IS THE PROPERTY OF REED MANUFACTURING AND IS LOANED WITHOUT CONSIDERATION OTHER THAN THE BORROWER'S AGREEMENT THAT IT SHALL NOT BE REPRODUCED, COPIED, LOANED, OR DISPOSED OF, DIRECTLY OR INDIRECTLY, NOR USED FOR ANY PURPOSE OTHER THAN THAT FOR WHICH IT IS SPECIFICALLY FURNISHED.