REED	TITLE: C-RAIL, HOSE CLAMPS	PN 801171	REV

Make from: PN 801171 C-Rail

Hydac PN: HRL-TS-28x11-ST-BL-1M

STD LENGTH=39 INCHES
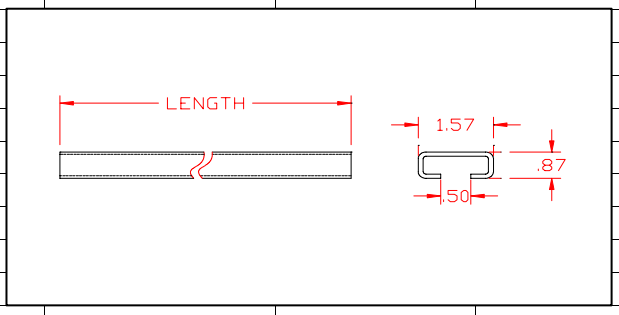
Dash No.	Length (in)
-001	2.50
-005	4.00
-008	5.00
-002	5.50
-012	6.00
-007	6.50
-013	6.75
-003	8.25
-004	10.00
-009	11.50
-010	12.00
-011	13.00
-006	17.25