PART NUMBER	REV
801154	B

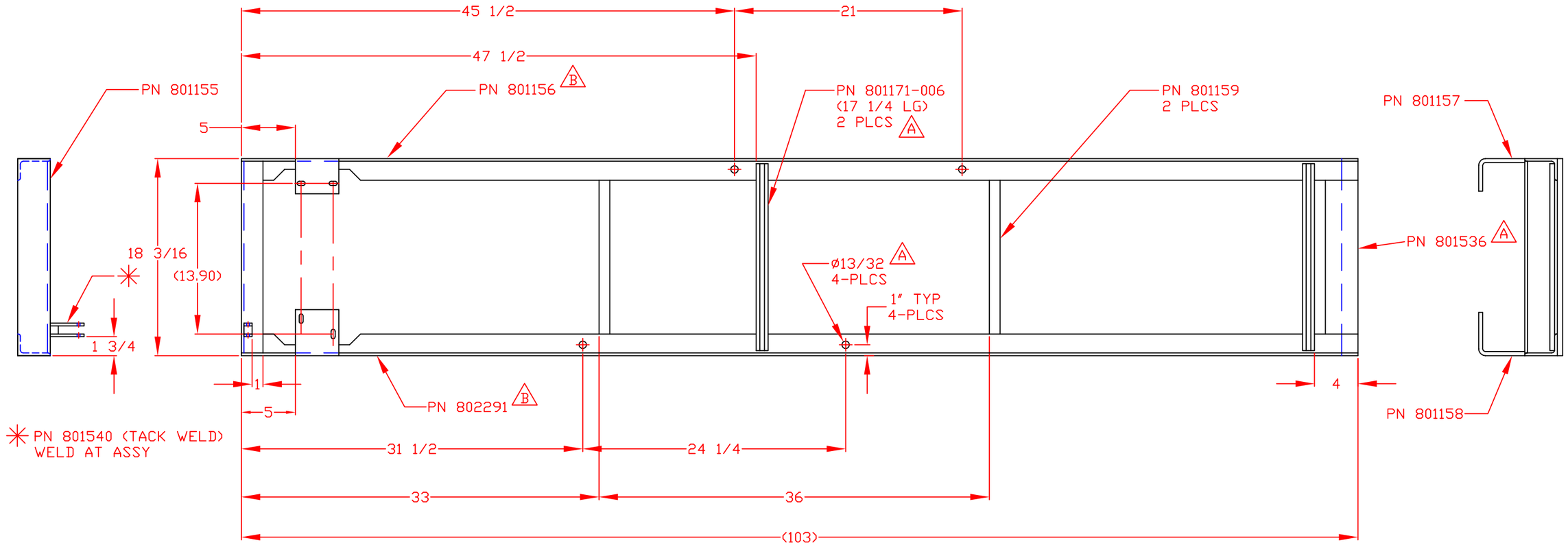

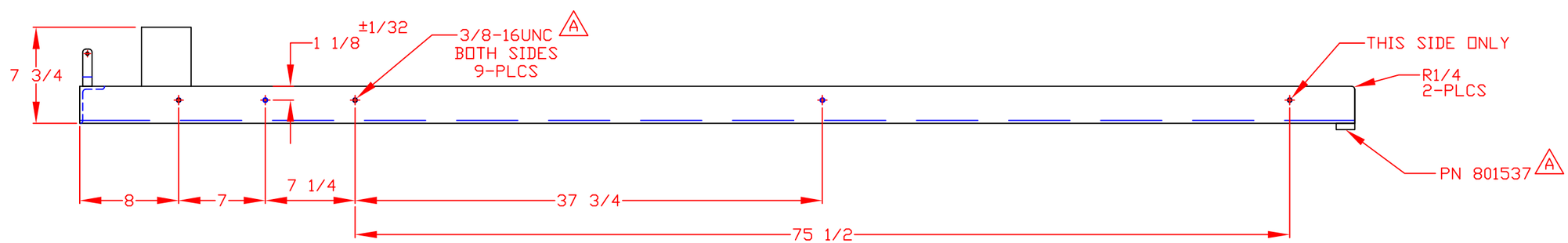

LTR	DATE	ENGINEERING CHANGE NOTICE #	BY
B	12/6/00	ECN #261	SK
A	10/28/99	DCN #151	EY

REVISIONS

UNLESS OTHERWISE SPECIFIED, DIMENSIONS ARE IN INCHES AND TOLERANCES ARE:

FRACT	DECIMAL	ANGLE
1/32	.010	1/2°

DO NOT SCALE DRAWING

CE	BY	DATE
DRAWN	SK	3/23/99
APPVD		

REED

CONCRETE PLACING EQUIPMENT
CHINO, CA 91710

TITLE FRAME, BOOM VALVE MOUNTING

MATERIAL SEE DRAWING

THIS DRAWING IS THE PROPERTY OF REED MANUFACTURING AND IS LOANED WITHOUT CONSIDERATION OTHER THAN THE BORROWER'S AGREEMENT THAT IT SHALL NOT BE REPRODUCED, COPIED, LOANED, OR DISPOSED OF, DIRECTLY OR INDIRECTLY, NOR USED FOR ANY PURPOSE OTHER THAN THAT FOR WHICH IT IS SPECIFICALLY FURNISHED.

PART NUMBER	REV
801154	B

SHEET__OF__