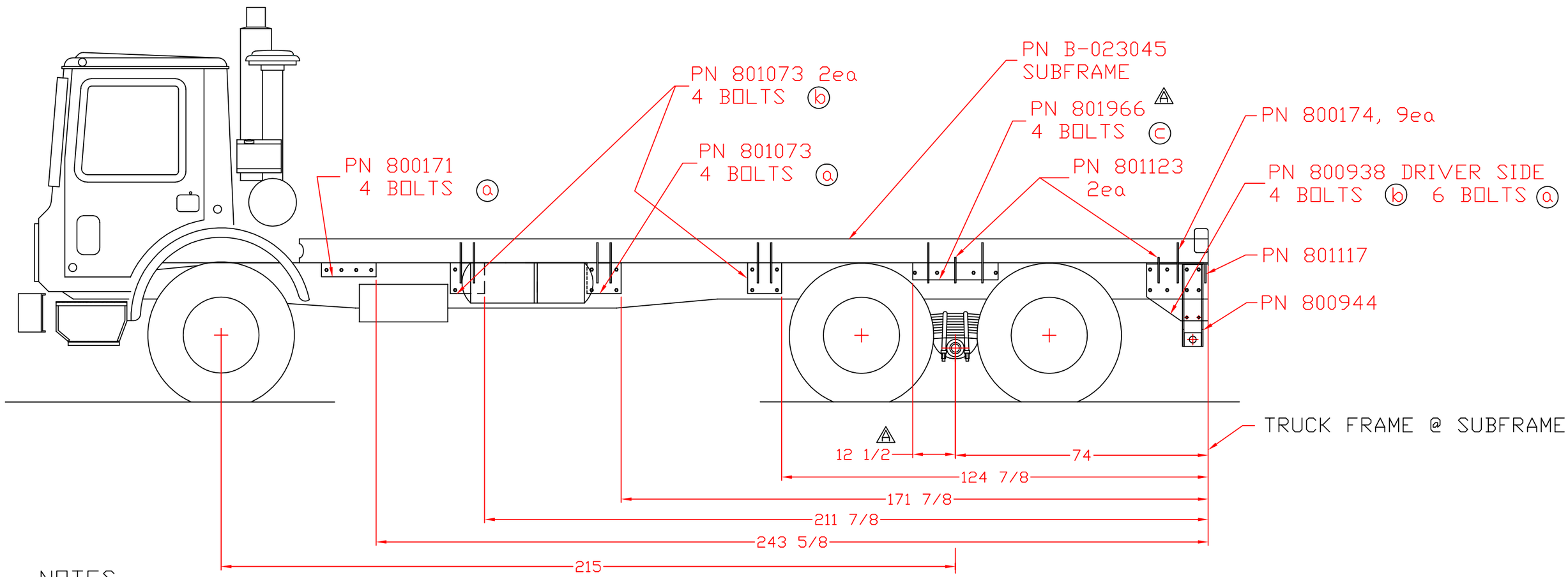

NOTES

1. BOLT, SHEAR PLATE TO FRAME USING:

ⓐ	5/8-11x2" HHCS	14 ea
ⓑ	5/8-11x2 1/2" HHCS	12 ea
ⓐ + ⓑ	LOCK NUT 5/8-11	56 ea
ⓒ	3/4-10x3" HHCS	4 ea
ⓒ	3/4-10 LOCK NUT	4 ea

LTR	DATE	ENGINEERING CHANGE NOTICE #	BY
A	8/25/00	ECN # 227	SK

REVISIONS

UNLESS OTHERWISE SPECIFIED, DIMENSIONS ARE IN INCHES AND TOLERANCES ARE:

FRACT	DECIMAL	ANGLE
1/32	.030	1/2°

DO NOT SCALE DRAWING

CE	BY	DATE
DRAWN	SK	3/16/99
APPVD		

REED

CONCRETE PLACING EQUIPMENT
CHINO, CA 91710

TITLE SUBFRAME INSTALLATION, XT36

MATERIAL

PART NUMBER 800568

REV A

THIS DRAWING IS THE PROPERTY OF REED MANUFACTURING AND IS LOANED WITHOUT CONSIDERATION OTHER THAN THE BORROWER'S AGREEMENT THAT IT SHALL NOT BE REPRODUCED, COPIED, LOANED, OR DISPOSED OF, DIRECTLY OR INDIRECTLY, NOR USED FOR ANY PURPOSE OTHER THAN THAT FOR WHICH IT IS SPECIFICALLY FURNISHED.