PART NUMBER	REV
800126	A

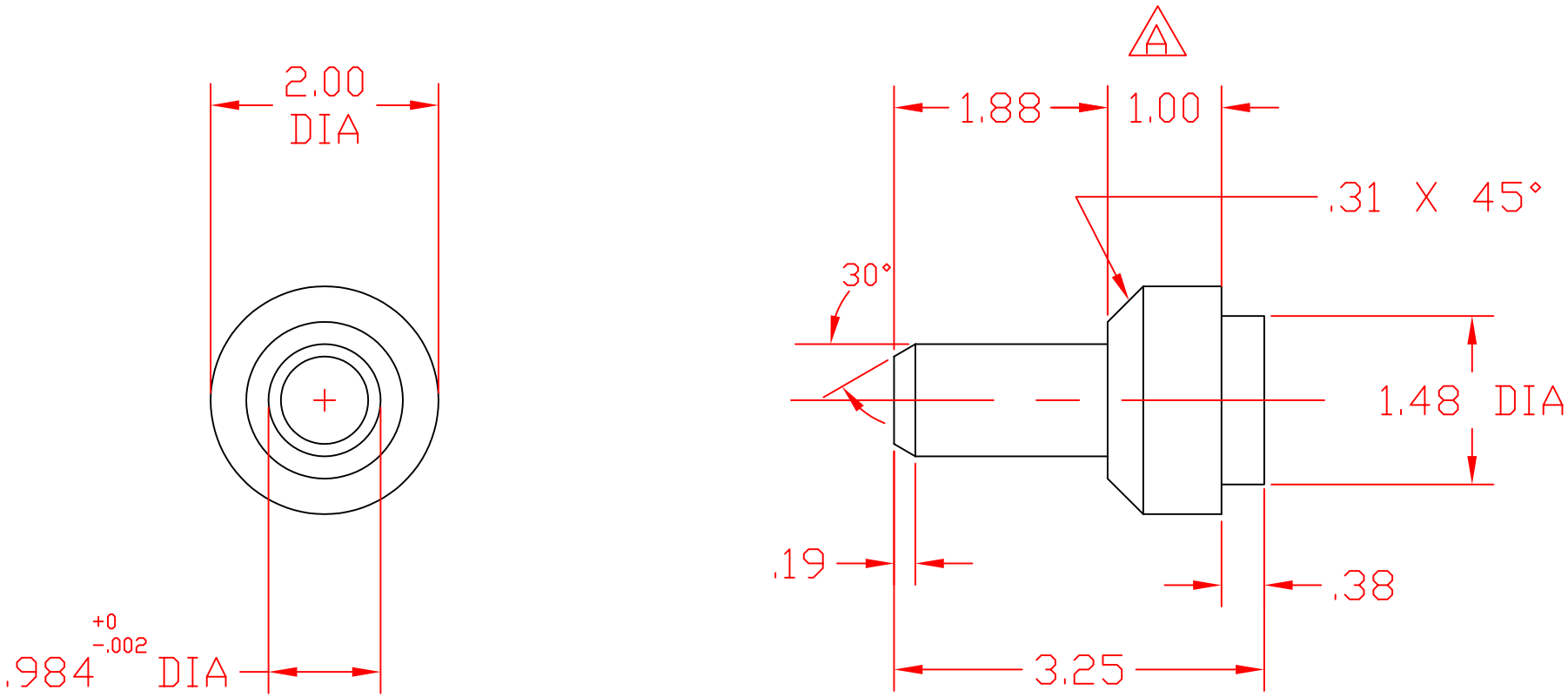

LTR	DATE	ENGINEERING CHANGE NOTICE #	BY
A	11/11/99	CHG 1.25" TO 1.00"	JIMO

REVISIONS

UNLESS OTHERWISE SPECIFIED, DIMENSIONS ARE IN INCHES AND TOLERANCES ARE:

FRACT	DECIMAL	ANGLE
1/32	.030	1/2°

DO NOT SCALE DRAWING

CE	BY	DATE
DRAWN	JIMO	10/28/97
APPVD		

REED

CONCRETE PLACING EQUIPMENT
CHINO, CA 91710

TITLE SHAFT, PTO AXLE

MATERIAL #68419 ROUND BAR 2" DIA CRS

THIS DRAWING IS THE PROPERTY OF REED MANUFACTURING AND IS LOANED WITHOUT CONSIDERATION OTHER THAN THE BORROWER'S AGREEMENT THAT IT SHALL NOT BE REPRODUCED, COPIED, LOANED, OR DISPOSED OF, DIRECTLY OR INDIRECTLY, NOR USED FOR ANY PURPOSE OTHER THAN THAT FOR WHICH IT IS SPECIFICALLY FURNISHED.

PART NUMBER	REV
800126	A

SHEET __ OF __