PROPRIETARY DRAWING - Distribution, reproduction or disclosure of information pertaining tothis drawing or design to any party other than those directly working with HYDAC is strictly prohibited without the written consent of HYDAC.

3D-CAD

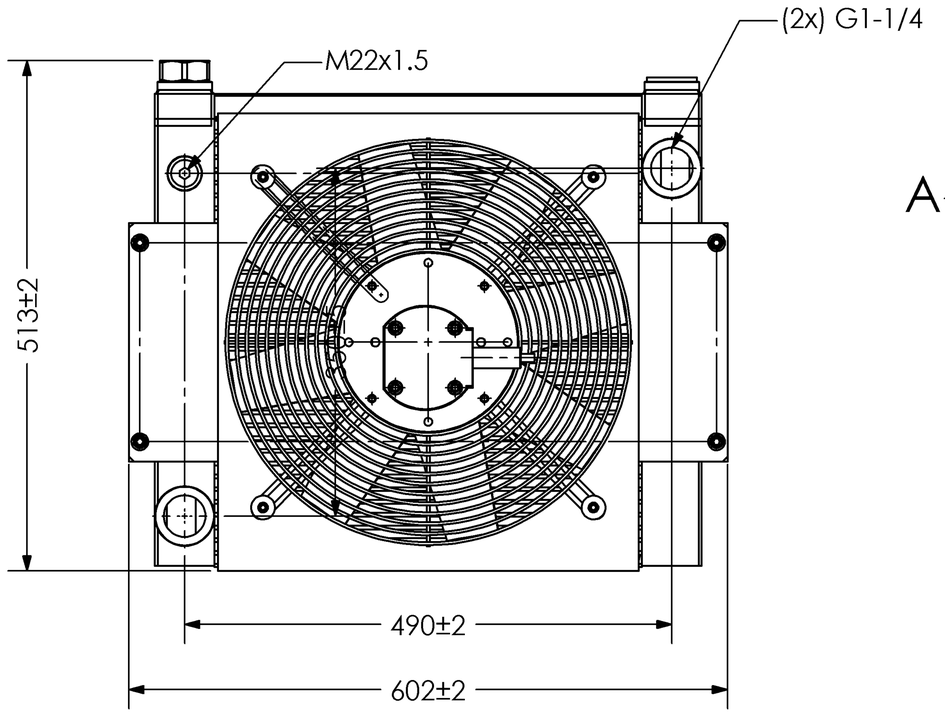

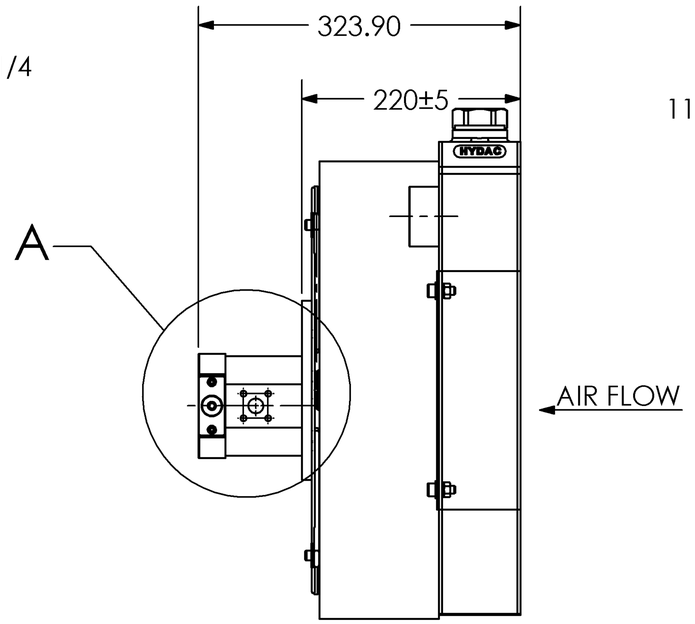

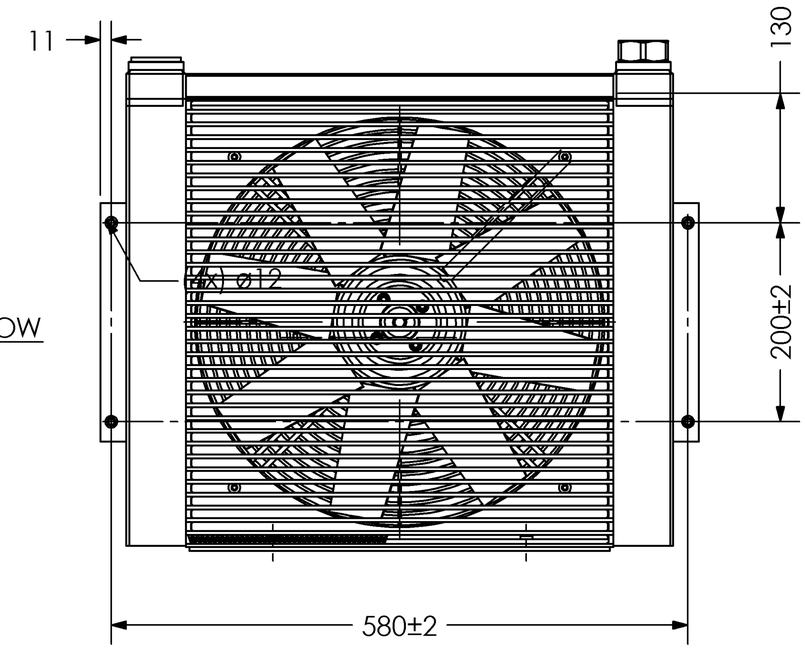

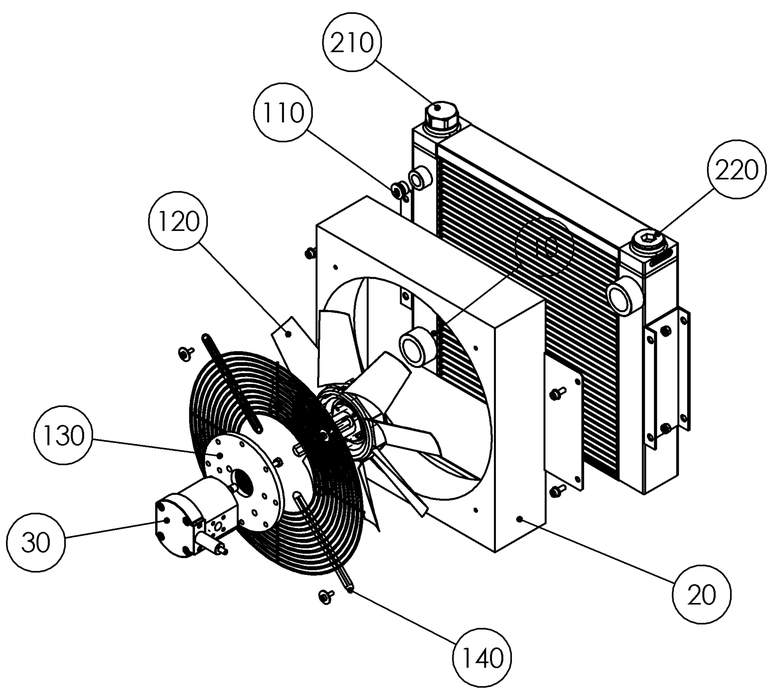

Item #	Qty	Description	Part #
10	1	Heat Exchanger	03138837
20	1	Housing	03106812
30	1	Motor w/Relief	02581792
110	1	M22 Hollow Hex Plug	02506527
120	1	Fan	03107075
130	1	Motor Support Bracket	03106375
140	1	Fan Grill	03025559
210	1	IBT45	03137938
220	1	G1-1/4 Hollow Hex Plug w/seal	02506341

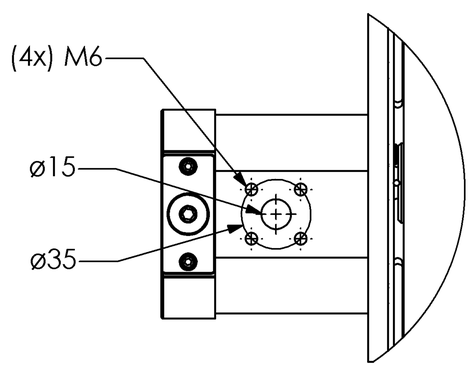

DETAIL A
SCALE 1 : 3

Form u. Lage/Geometrical tolerances Toleranzklasse/Tolerance class Ⓚ Ⓛ

Passmaße/Fit | Abmaße/Deviations

Oberflächenbeschaffenheit/Surface quality ISO 1302 | Werkstückkanten/Corners ISO 13715 | Allgemeintoleranzen(General tolerances ISO 2768 - mH

Längenmaße/linear dimensions mm [in]

über/over bis/to	0,5 6	6 30	30 120	120 400	400 1000
	±0,1	±0,2	±0,3	±0,5	±0,8

Auftr.-/Entw.-Projekt-Nr. Ord.-/Devel.-Project-No

Werkstoff/Material | Masse/Mass

Fertigmaße/Finished size

Anz./No Index/Index	gepr. am chkd. on geänd. am modif. on	gepr. von checked geänd. von modif. by	Ä. M. Nr. Notice of change No	Vers./Rev.	Datum/Date	Name/Name
				gez./drawn	01/17/05	LJW
				gepr./chkd.		

HYDAC Hydraulic Division

Blatt von/Sheet of **1 of 1**

Format/Size **11x17**

SW-Vers. **2004**

Benennung/Description

ELH51.0H14SIBT45 SO42

Klasse/Class 55 494 970 3

Zeichn.-Nr./Draw.-No 02593246

Ers. für/Exchange for

Ers. durch/Replaced by

Schutzvermerk ISO 16016 beachten/Observing of protection notice ISO 16016